Standard Features

Clue is a collection of organic-shaped tables with fully enclosed sides that may be used individually or grouped together to form configurations. The table is available in two heights with maple or walnut veneers. The optional power module includes power + USB installed in the top of the work surface. Due to the organic shapes the dimensions can vary depending on the orientation of the product. Therefore, a maximum dimension is provided in the price list information. The 2D models provide dimensional drawings of Clue. Consult Bernhardtdesign.com for a complete library of 2D, 3D and revit models.

Veneer Selection

E Maple - Quarter Cut

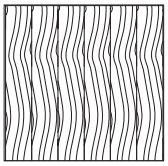

9 Walnut - Quarter Cut

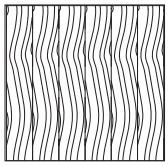

Finish Selection

When specifying light finishes such as 836, 837, 840, 850 or 870 the color and characteristic variances of the solid wood are apparent. Therefore, exact color matches are not possible. Paint finishes are available as special finishes. See Terms and Conditions for special finish upcharges.

Maple

Standard Finish

805	839	861
823	840	865
834	841	866
836	850	870
837	860	

Walnut

Standard Finish

823	861
839	866
841	870
860	

Power Module

The power module installs flush to the worksurface and provides one grounded outlet and one USB duplex. UL approved with spill-proof technology, the power module has a 15 amp 72'' cord. Specify power code P for Clue with power/usb. Specify power code X for Clue without power.

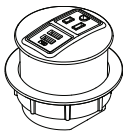

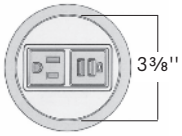

Power Module Locations

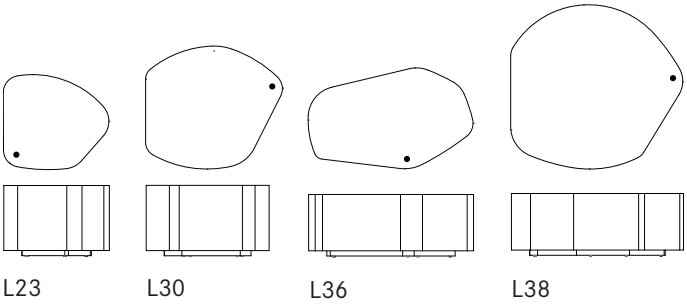

Sample Configurations

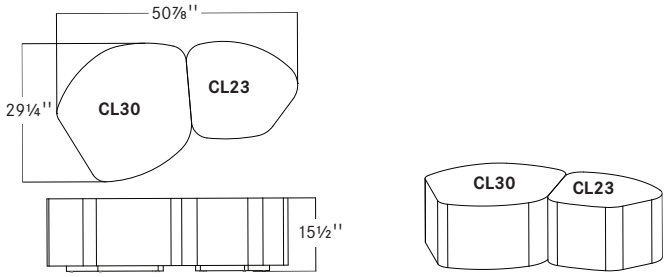

Clue Configuration 1

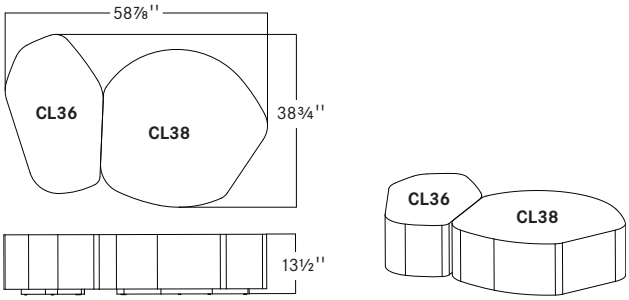

Clue Configuration 2

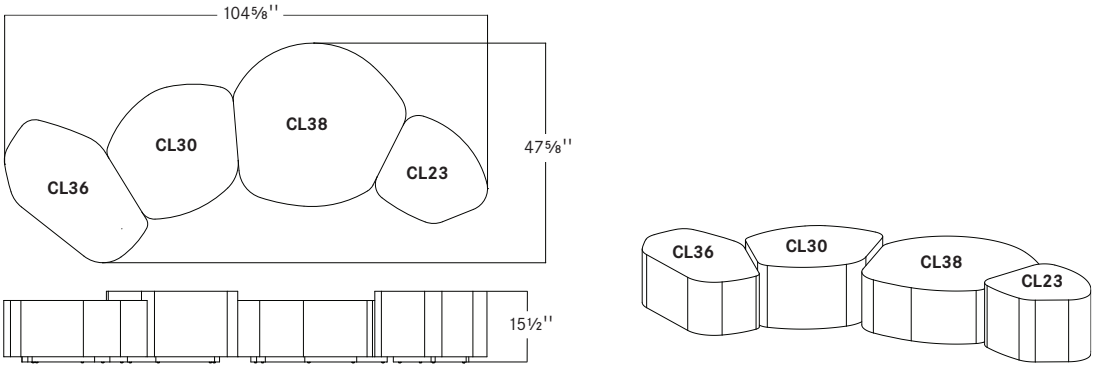

Clue Configuration 3

	description	sku	w	d	h	weight	maple		walnut	
							X none	P power	X none	P power
	occasional table	L23	23	20¾	15½	37	$ 2200	$ 2500	$ 2500	$ 2800
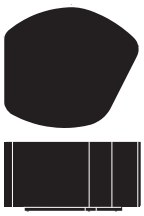	**occasional table**	L30	29¾	26¾	15½	49	2600	2900	2900	3200
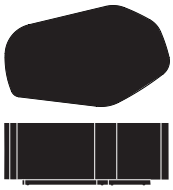	**occasional table**	L36	35⅝	21¾	13½	53	2600	2900	2900	3200
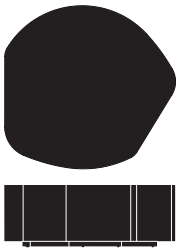	**occasional table**	L38	37	35⅜	13½	67	3000	3300	3300	3600

specification codes	series	sku	veneer	style	power	finish
	C clue		E maple 9 walnut	X none	P power + USB X none	
	C			X		